SMA Bulkhead Crimp for LMR-195, RG-58

EZ-SMAB195

SMA Bulkhead Crimp connector for LMR-195, RG-58 series coaxial cable.

SMA Series coaxial connectors are medium-sized, threaded coupling connectors designed for use from DC to 11 GHz.

Their consistently low broadband VSWR have made them popular over the years in many applications.

The SMA series connector is impedance matched to 50 ohm cables.

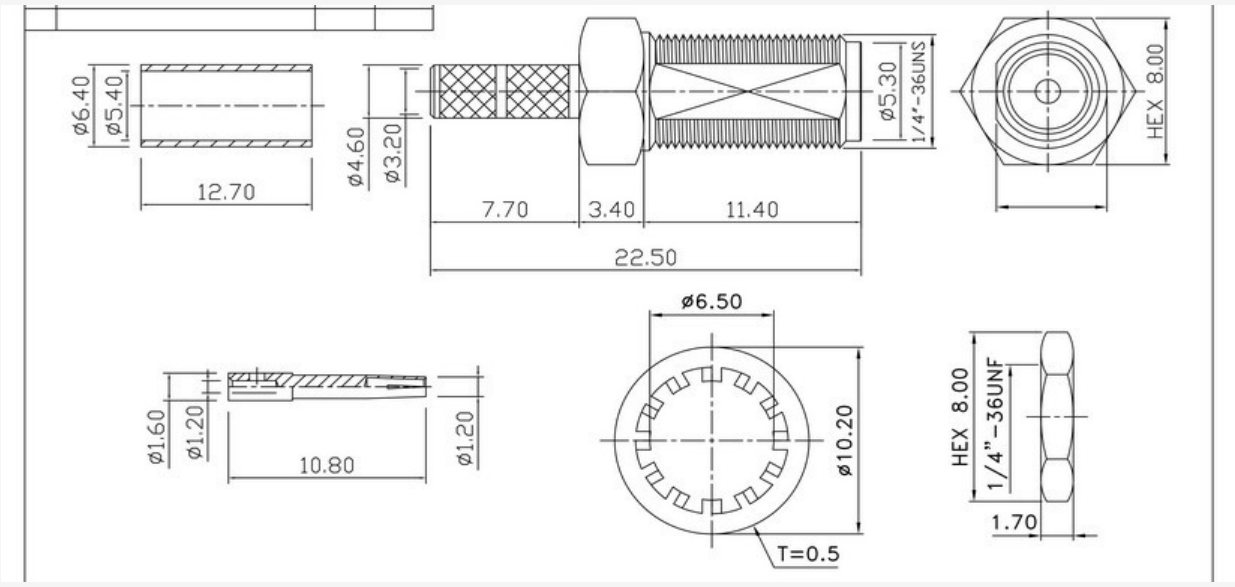

TECHNICAL SPECIFICATIONS	
Impedance	50 ohm
Frequency Range	0 to 11.0 GHz
V.S.W.R.	1.3 max
Working Voltage	1,000 volts rms max at sea level
Dielectric Withstanding Voltage	2,500 volts rms max at sea level
Contact Resistance	Center contact=1.0 Milliohms max
Contact Resistance	Outer contact=1.0 Milliohms max
Insertion Loss	0.3 dB max at 10 GHz
Insulation Resistance	5,000 Megohms min
Body Plating	Gold
Contact Plating	Gold
Crimp Tube Plating	Gold
Dielectric	Teflon

Connector
SMA
Male Thread
Female Center Pin

Additional Images

All specifications subject to change without notice © 2010 www.e-zy.net